客户图

NOTES:
1.MATERIAL:
1.1 HOUSING: POLYAMIDE BLACK UL 94V-0
1.2 CONTACT: COPPER ALLOY, GOLD (SEE P/N) PLATED IN CONTACT AERA, TIN PLATED IN SOLDER AREA, 50u"MIN NICKEL UNDERPLATED OVERALL.
2.ELECTRICAL:
2.1 CURRENT RATING: 25A.
2.2 DIELECTRIC WITHSTANDING VOLTAGE: 750V DC/MINUTE.
2.3 CONTACT RESISTANCE: 2mΩ MAX.
2.4 INSULATION RESISTANCE:250V DC/1000MΩ MIN
3.MAX PROCESSING TEMP:260°C SECONDS 10S
4.OPERATION TEMPERATURE:-55°C TO +105°C.
5.ORDER INFORMATION:

66L1-F XXX SX 163 C 01

- F=母座
- Pin数码：002=2PIN, 003=3PIN, ..., 010=10PIN
- 端子电镀：S0=Gold Flash/Tin (半金锡), S1=1u" Gold/Tin, S2=3u" Gold/Tin, S3=5u" Gold/Tin, S4=10u" Gold/Tin, S5=15u" Gold/Tin, S6=30u" Gold/Tin
- 塑胶高度：163=16.30mm
- 包装方式：C=TRAY

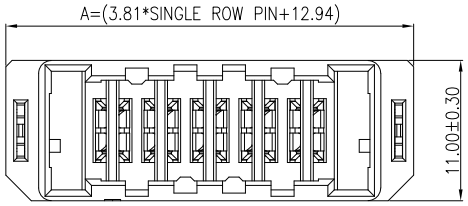

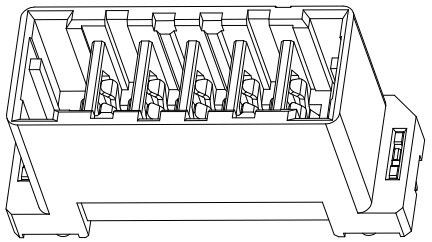

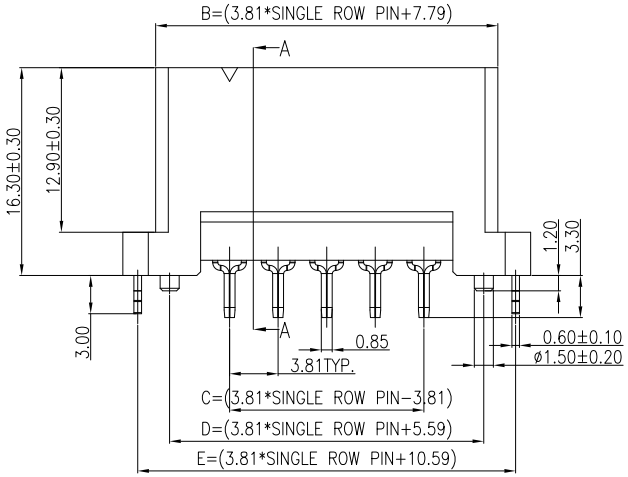

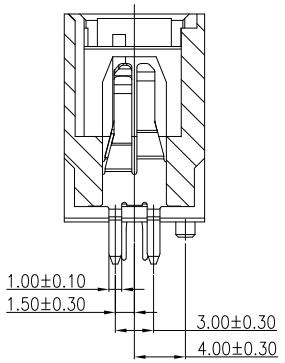

SECTTION A-A

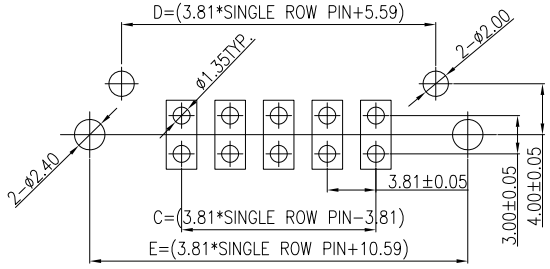

RECOMMENDED PCB LAYOUT(TOP SIDE)

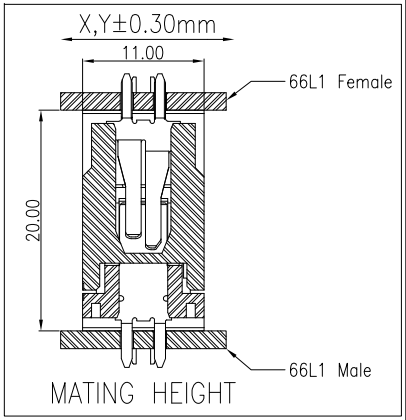

MATING HEIGHT

REV	DATE	MODIFICATION DESCRIPTION	CHANGE	APPROVE
A0		NEW	———	———

OPERATION		DRAW	Mr.Zeng	2025.07.25
X.X	±0.40	DESIGN	Jensen	2025.07.25
X.XX	±0.25	CHECK	Jack	2025.07.25
X.XXX	±0.15	APPROVE	Andy	2025.07.25
Angle	±3°			
DIM.	TOL	UNIT	mm	SCALE 1:1

SOLEPIN 东莞市硕品电子有限公司
PROFESSIONAL CONNECTOR DONGGUAN SOLEPIN ELECTRONICS CO., LTD.

SIZE	A4	PART NO.	66L1-F XXX SX 163 C 01
SHEET	1/1	TITLE:	66L1 3.81mm母座BTB 180° 直插 半金锡 吸塑
PROJ.		DRAW NO.	SP-3436

客户图

NOTES:
1.MATERIAL:
1.1 HOUSING: POLYAMIDE BLACK UL 94V-0
1.2 CONTACT: COPPER ALLOY, GOLD (SEE P/N) PLATED IN CONTACT AERA, TIN PLATED IN SOLDER AREA, 50u"MIN NICKEL UNDERPLATED OVERALL.
2.ELECTRICAL:
2.1 CURRENT RATING: 25A.
2.2 DIELECTRIC WITHSTANDING VOLTAGE: 750V DC/MINUTE.
2.3 CONTACT RESISTANCE: 2mΩ MAX.
2.4 INSULATION RESISTANCE:250V DC/1000MΩ MIN
3.MAX PROCESSING TEMP:260°C SECONDS 10S
4.OPERATION TEMPERATURE:-55°C TO +105°C.
5.ORDER INFORMATION:

66L1-M XXX SX 142 C 01

M=公头

Pin数码：
002=2PIN
003=3PIN
.....
010=10PIN

端子电镀：
S0=Gold Flash/Tin (半金锡)
S1=1u" Gold/Tin
S2=3u" Gold/Tin
S3=5u" Gold/Tin
S4=10u" Gold/Tin
S5=15u" Gold/Tin
S6=30u" Gold/Tin

塑胶高度：
142=14.20mm

包装方式：
C=TRAY

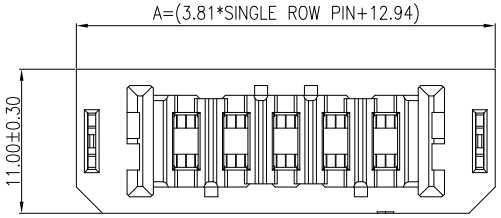

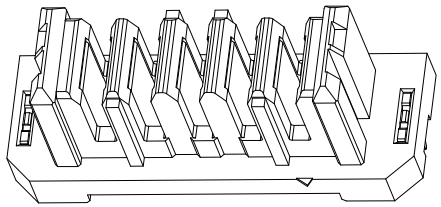

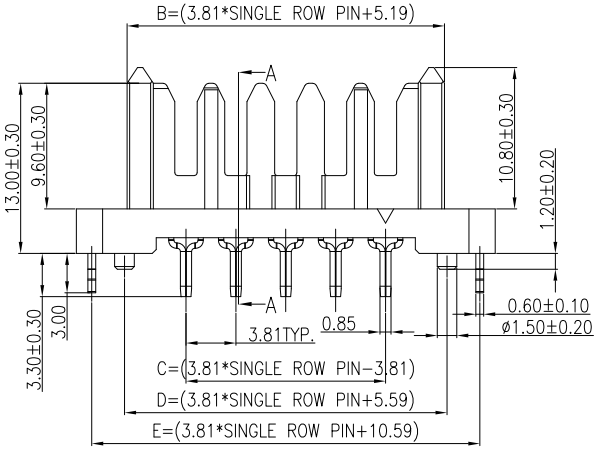

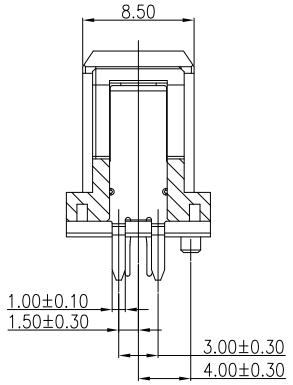

SECTTION A-A

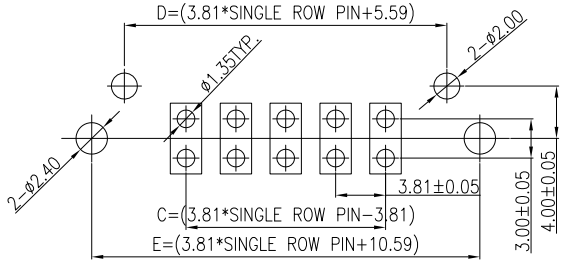

RECOMMENDED PCB LAYOUT(TOP SIDE)

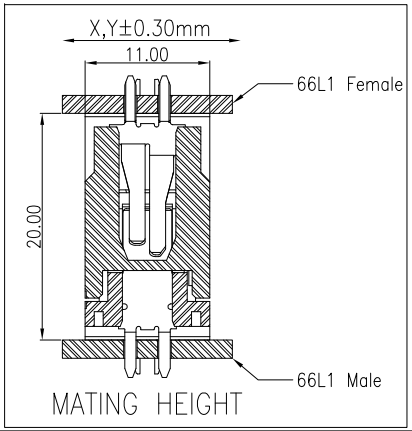

MATING HEIGHT

REV	DATE	MODIFICATION DESCRIPTION	CHANGE	APPROVE
A0		NEW	———	———

OPERATION		DRAW	Mr.Zeng	2025.07.25
X.X	±0.40	DESIGN	Jensen	2025.07.25
X.XX	±0.25	CHECK	Jack	2025.07.25
X.XXX	±0.15	APPROVE	Andy	2025.07.25
Angle	±3°			
DIM.	TOL	UNIT	mm	SCALE 1:1

SOLEPIN 东莞市硕品电子有限公司
PROFESSIONAL CONNECTOR DONGGUAN SOLEPIN ELECTRONICS CO., LTD.

SIZE	A4	PART NO.	66L1-M XXX SX 142 C 01
SHEET	1/1	TITLE:	66L1 3.81mm公头BTB 180° 直插 半金锡 吸塑
PROJ.		DRAW NO.	SP-3437